CODEL
Monitoring Solutions

EnergyTech 101/102 - Opacity Monitor

A low cost opacity monitor using well-proven technology providing accurate and rapid result whilst meeting legislative requirements.

The Energytech 101 & 102 has been designed for simple installation offering high reliability but very low maintenance.

- Suits small boiler applications
- No moving parts means low maintenance
- Data in % opacity, mg/m^3, mg/Nm^3 dust
- Proven reliable technology

ISO 9001:2008
Quality Certification

Monitoring Solutions EnergyTech www.codel.co.uk

Doc i/d : 100415 Issue : A Rev : 0 Date : 17/05/2018 © 2010 CODEL International Ltd. We reserve the right to modify designs without prior notice

EnergyTech 101/102

The EnergyTech 101/102 Opacity Monitors consist of a visible light transmitter and receiver arrangement with digital data processing in a local display unit.

The monitors can display data in either opacity, extinction or dust density in mg/m3 or normalised dust density in mg/Nm3.

The EnergyTech 101/102 possesses four analogue inputs for normalisation data; temperature, oxygen, pressure and water vapour.

Pressure, temperature and oxygen levels can be used by the the EnergyTech 102 to normalise the dust level to standard measurement conditions. This data can be brought in via 4-20mA inputs, the keypad or the serial communications highway, if the instrument is part of an integrated system.

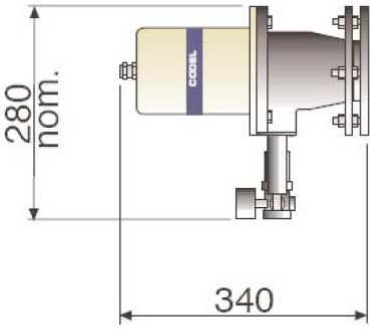

Transceiver
(wt. 5.5kg)

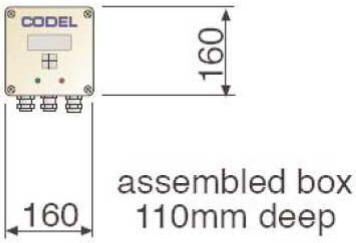

SPU/PSU
(wt. 3kg)

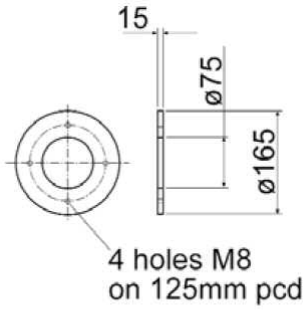

Site Flange

EnergyTech

Rugged & robust design developed
for easy installation and maintenance

proven technology meets legislative requirements

Suits small boiler applications

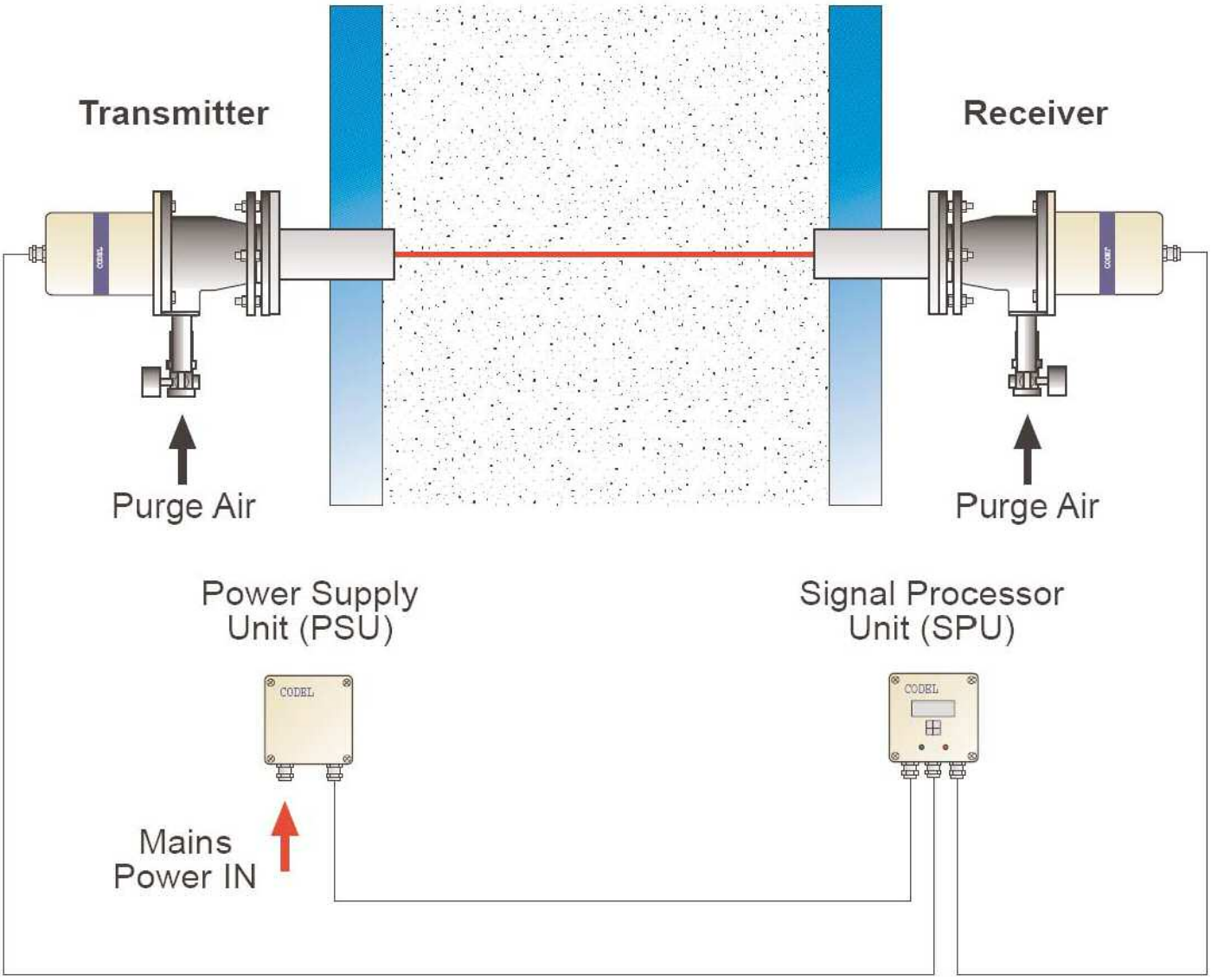

Technical Specification

Sensor Unit

Operating Principle	Single pass transmissometer
Light Source	modulated high-intensity LED @ 637nm wavelength
Span	fully selectable in % opacity, extinction, mg/m3 & mg/Nm3
Averaging	4 rolling averages selectable from 10 secs to 30 days
Accuracy	±0.2% opacity
Drift	<1% opacity per month
Resolution	0.1% opacity
Optical Path Length	0.5 - 15m
Air Purge	Compressed air, 1 litre/sec @ 1bar
Ambient Temperature	-20°C to +70°C
Power Supply	76V to 265V AC @ 50/60Hz, 20VA
Construction	Epoxy-coated aluminium to IP67

Compliances

EMC	89/336/EEC directive compliant
Low Voltage	73/23/EEC directive compliant)

Customer Interface

Analogue Outputs	2 x 4-20mA current outputs, isolated, 500Ω load max, fully configurable from keypad
Logic Outputs	2 x volt-free SPCO contacts, 50V, 1A max., configurable as alarm contacts 1 x volt-free SPCO contact, 50V, 1A max. for data valid
Input (EnergyTech 102 only)	4 x 4-20mA inputs for normalisation data - temperature, oxygen, pressure & water vapour
Display	32 Character alpha-numeric back-lit LCD)
Keypad	4-key soft-touch entry

CODEL International LTD
Station Building
Station Road
Bakewell
Derbyshire
DE45 1GE

Tel : +44 (0)1629 814351
Fax : +44 (0)1629 566307
Web : www.codel.co.uk
email : Sales@codel.co.uk

Distributor

Doc i/d : 100415 Issue : A Rev : 0 Date : 17/05/2018 © 2010 CODEL International Ltd. We reserve the right to modify designs without prior notice